twin

SOSPENSIONE

Suspension | Suspension | Wandleuchte

Lampada a sospensione circolare in metallo, diffusore in Metacrilato bianco, Biemissione, LED integrato.

Ring-shaped suspension in metal, white diffuser Methacrylate, double emission, integrated LED.

Suspension circulaire en métal, diffuseur blanc Méthacrylate, double émission, LED intégrée.

Kreisförmige Hängeleuchte aus Metall, Diffusor aus weißem Methacrylat, Biemission, Integrierte LED.

BIEMISSIONE
double emission

DIMMERABILE E DINAMICA
dimmable and dynamic

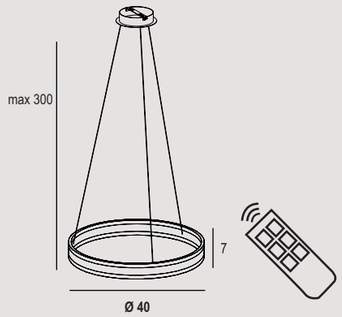

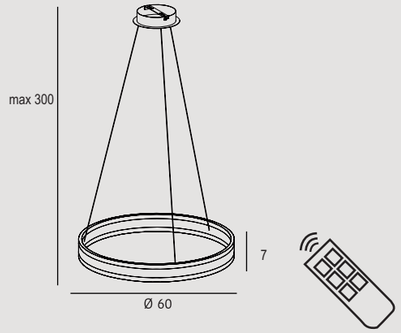

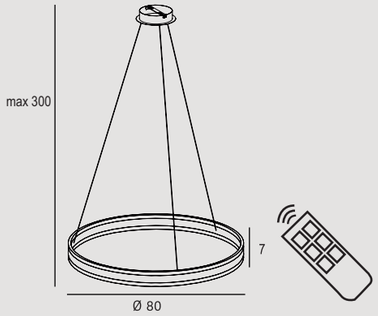

TWIN S40
LED 29 Watt
LM: SOURCE 2900 (REAL 2450)
CCT 3000/6000K - IP20
ø 40 P 7 H MAX 300 cm
Dimmerabile e dinamica con comando a distanza;
Dimmable with remote control.

TWIN S60
LED 72 Watt
LM: SOURCE 5580 (REAL 4360)
CCT 3000/6000K - IP20
ø 60 P 7 H MAX 300 cm
Dimmerabile e dinamica con comando a distanza;
Dimmable with remote control.

TWIN S80
LED 96 Watt
LM: SOURCE 7110 (REAL 4950)
CCT 3000/6000K - IP20
ø 80 P 7 H MAX 300 cm
Dimmerabile e dinamica con comando a distanza;
Dimmable with remote control.

JEWELS RANGE

FINITURE DISPONIBILI | *Finishes available*

WH	SG	DG	NE	RU	TO	MA
Bianco *White*	Grigio Perla *Silver grey*	Antracite *Dark grey*	Nero *Black*	Ruggine *Rust*	Tortora *Turtledove*	Magenta *Magenta*

GF	SF	RF	MG	BN	MC	VB
Foglia oro *Gold foil*	Foglia Argento *Silver foil*	Foglia Rame *Copper foil*	Oro opaco *Matt gold*	Oro rosato *Pink Gold*	Rame opaco *Matt copper*	Verde bosco *Forest green*

LED SMD | IP20 | F